TYPICAL SYPHON SYSTEM

FOR SYPHON SYSTEM TESTING SEE SB005

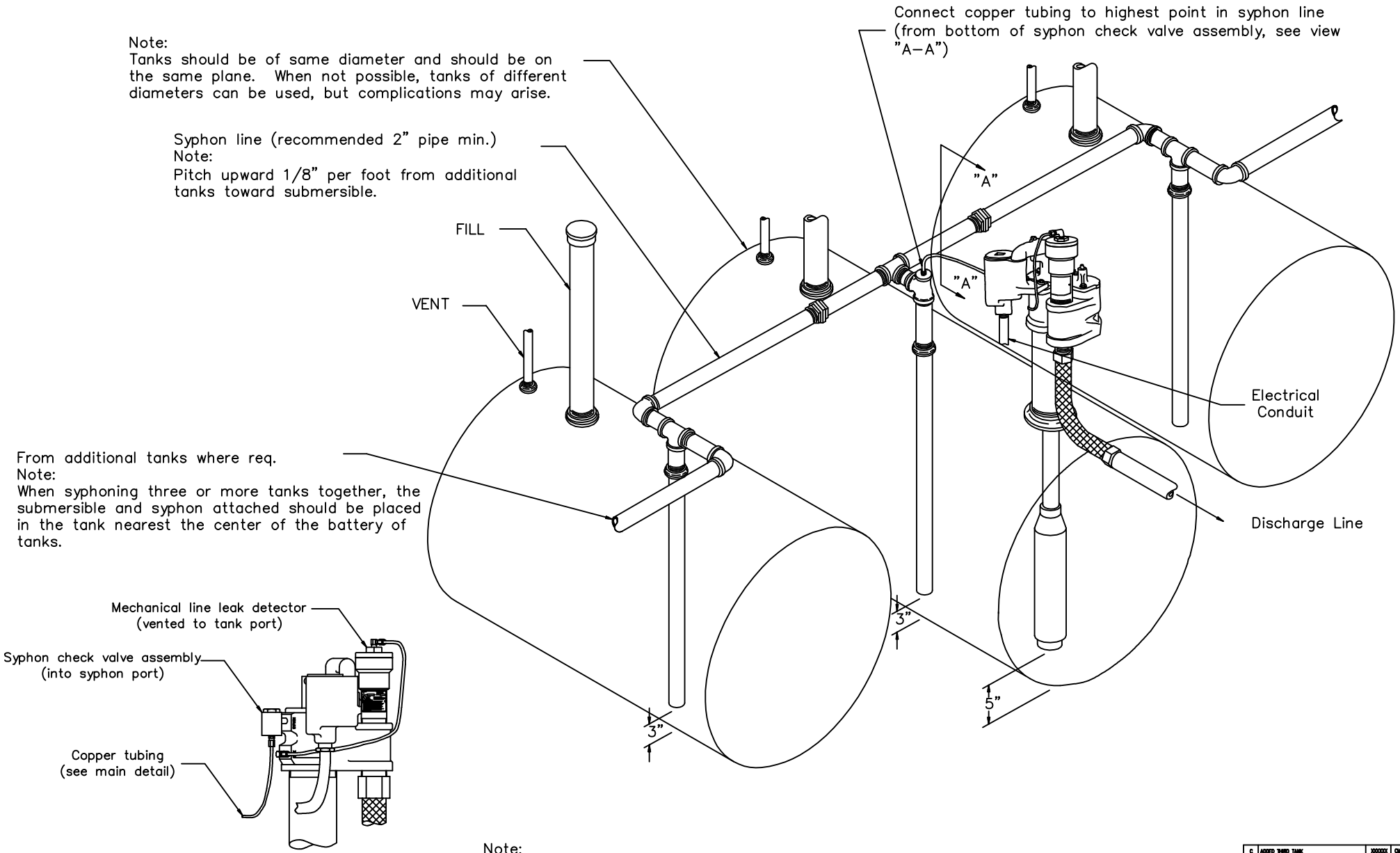

VIEW "A–A"

Note:
Installation must conform to applicable national, state, and local code requirements.

REV	DESCRIPTION	ECN NO	BY	DATE
C	ADDED THIRD TANK	XXXXXX	CML	08/27/13
2	ENLARGE TEXT	99003		
1	ENGINEERING RELEASE	----		

FE PETRO INC. Hollywood, MD 20636

TITLE: SYPHON SYSTEM WITH INSTRUCTIONS

DRAWN: BCG DATE: 2/19/97 DRW NO: ENGSK12A SUFFIX: ---

APPRVL: DPK DATE: 3/10/97 SCALE: NONE SHEET 1 OF 1

DO NOT SCALE DRAWING

STANDARD INCH TOLERANCES (UNLESS OTHERWISE SPECIFIED)

UNDER 6" .XX ±.02 .XXX ±.005 .XXXX ±.0005 OVER 6" .XX ±.03 .XXX ±.010 .XXXX ±.0010

ANGULAR ±1/2° FRACT ±1/64

MATERIAL:

SPECIAL DIST: ☐ HIGH CAP. ☐ MANIFOLD PROD ☐ SPARE PARTS ☐ MLD PROD ☐ PIPE PROD ☐ PWA PROD ☐ OTHER ☐ CONTROL BOX ☐ STP PROD ☐ STP KITTING